PUNKTKILDE™

Datasheet updated: *09-03-2020*

Fullrange model: *FSB512030-3814*

This 3 inch 8 ohm Fullrange driver, with 0.8 inch voice coil copper clad Aluminum wire, Aluminum former, damping glue coated glass fiber cone and rubber surround. It contains copper shorting cap on pole piece, which reduces coil inductance, thus providing both extended frequency response performance and reduce distortion. Whizzer cone in center can increase HF output. The Aluminum former, bottom plate and basket under spider are all vented hole so as to reduce air compression effects and aid cooling of the motor under high excursion conditions.

Transducer front and side images:

Specifications:

T-S Parameters	
Resonance frequency [fs]	119 Hz
Mechanical Q factor [Qms]	2.62
Electrical Q factor [Qes]	1.06
Total Q factor [Qts]	0.75
Force factor [Bl]	4.12 Tm
Mechanical resistance [Rms]	0.98 kg/s
Moving mass [Mms]	3.42 g
Compliance [Cms]	0.52 mm/N
Effective diaph. diameter [D]	60 mm
Effective piston area [Sd]	28.27 cm²
Equivalent volume [Vas]	0.59 l
Sensitivity (2.83V/1m)	83 dB
Ratio Bl/√Re	1.561 N/√W
Ratio fs/Qts	158.8 Hz

Electrical Data	
Nominal impedance [Zn]	8 Ω
Minimum impedance [Zmin]	7.1 Ω
Maximum impedance [Zo]	32.49 Ω
DC resistance [Re]	6.96 Ω
Voice coil inductance [Le]	0.071 mH

Power Handling	
100h RMS noise test (IEC 18.4)	20 W
Long-term max power (IEC 18.2)	- W

Voice Coil & Magnet Data	
Voice coil diameter	20.3 mm
Voice coil height	8.1 mm
Voice coil layers	4
Height of gap	3.5 mm
Linear excursion	± 2.3 mm
Max mech. excursion	± - mm
Unit weight	0.433 kg

Frequency Response / Impedance Curve:

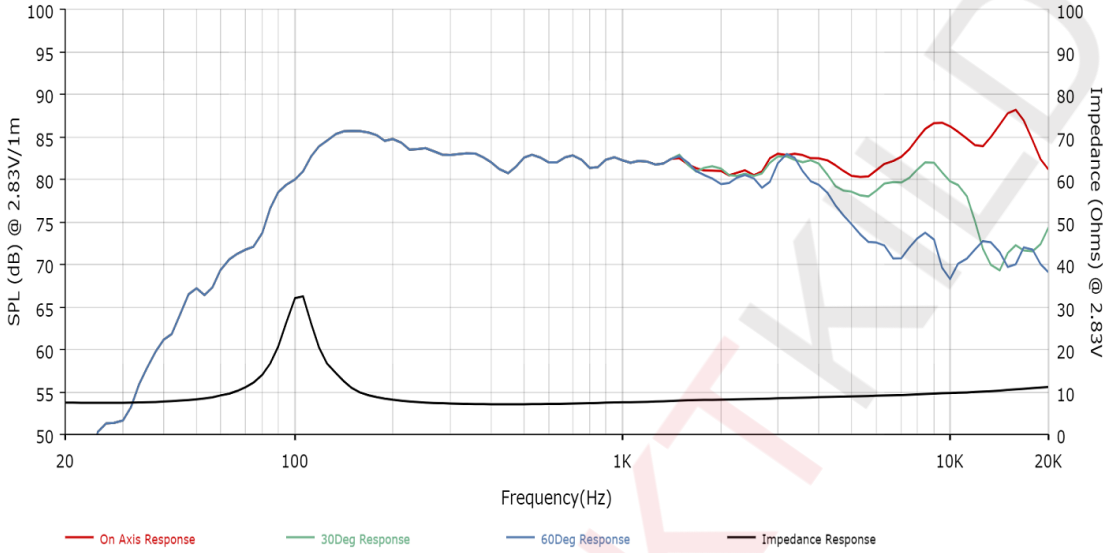
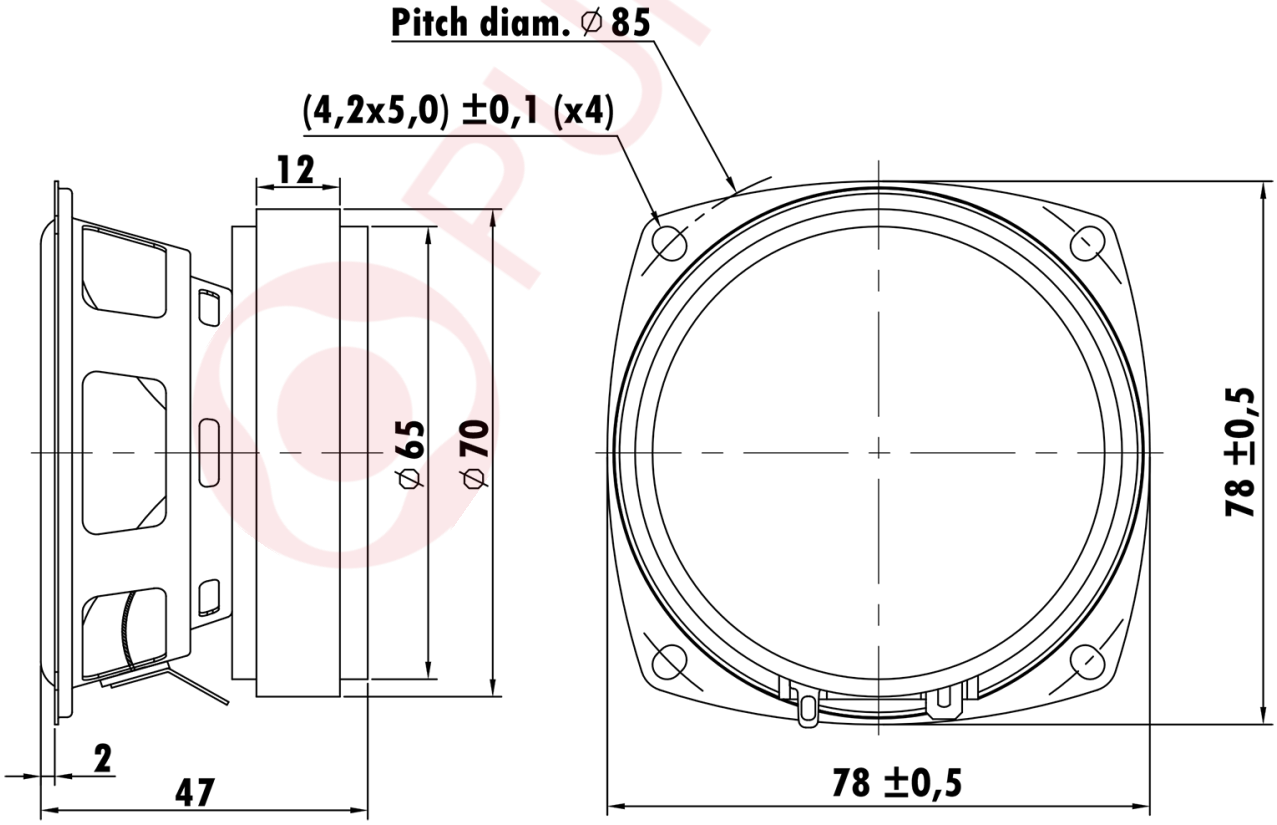
Transducer front and side images: